SUBMITTAL DATA SHEET

NL Check Valve – 7202-3JT 431

Meter Swivel Nut x T CTS Compression

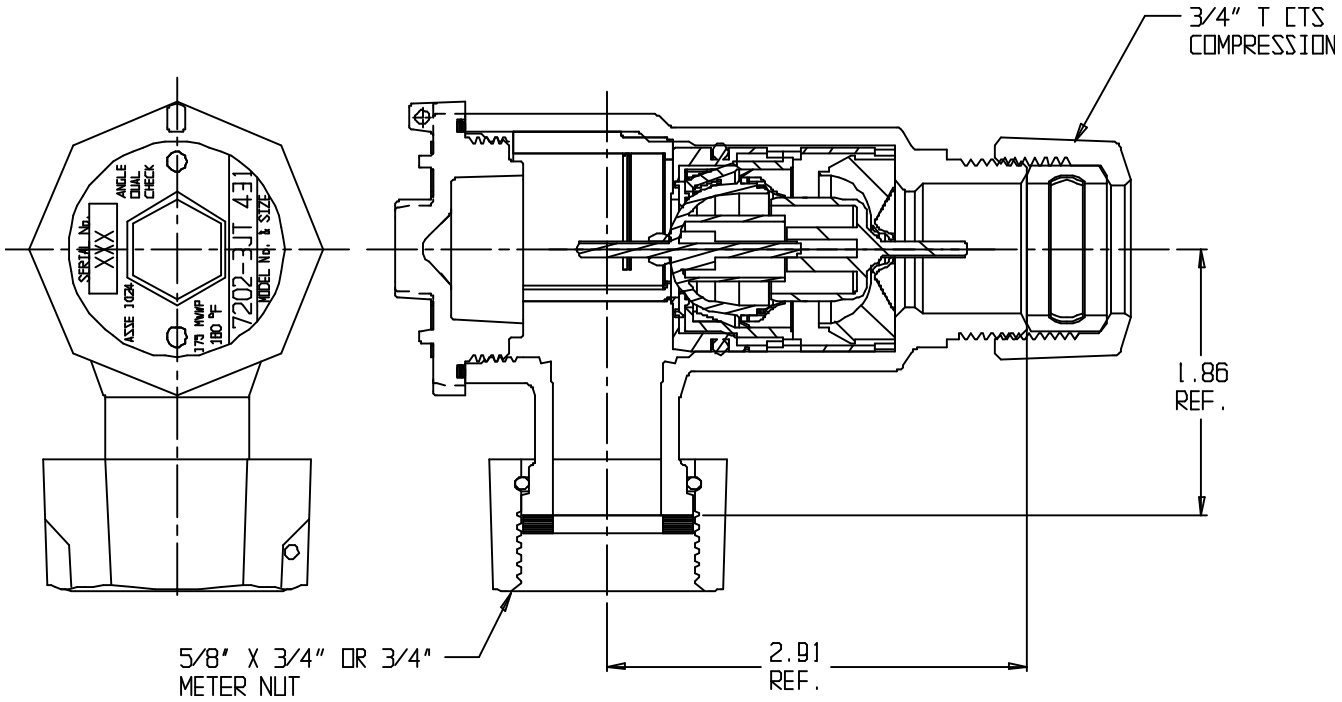

SUBMITTAL INFORMATION

- Manufactured in compliance with ANSI/AWWA C800 (latest revision)
- Dual checks manufactured in compliance with ANSI/ASSE 1024 (latest revision)
- Brass components in contact with potable water conform to ASTM B584, UNS C89833 (latest revision) and identified with "NL"
- Certified to NSF/ANSI 61 and NSF/ANSI 372
- Brass components not in contact with potable water conform to ASTM B62 and ASTM B584, UNS C83600 -85-5-5-5 (latest revision)
- Rated for 175 PSIG water pressure
- Insert stiffeners required on all flexible plastic connections

A.Y. McDonald Mfg. CO.
4800 Chavenelle Rd
Dubuque, IA 52002

Toll Free: 1-800-292-2737
sales@aymcdonald.com
aymcdonald.com

A.Y. McDonald considers the information on this assembly drawing correct when published. Item and option availability, including specifications, are subject to change without notice.

Submitted by: