SUBMITTAL DATA SHEET

No-Lead
Brass Pex Tee - 72330

Pex x Pex x Pex

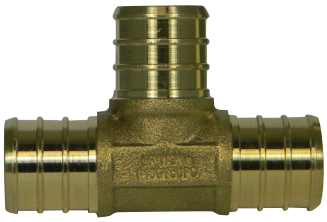

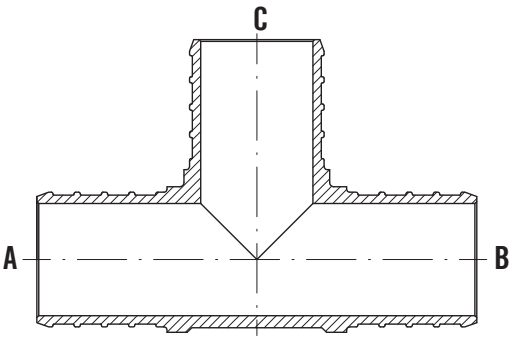

Pex Tee

Size	A	B	C
3/8”	3/8”	3/8”	3/8”
1/2”	1/2”	1/2”	1/2”
3/4”	3/4”	3/4”	3/4”
1”	1”	1”	1”
1 1/4”	1 1/4”	1 1/4”	1 1/4”
1 1/2”	1 1/2”	1 1/2”	1 1/2”
2”	2”	2”	2”

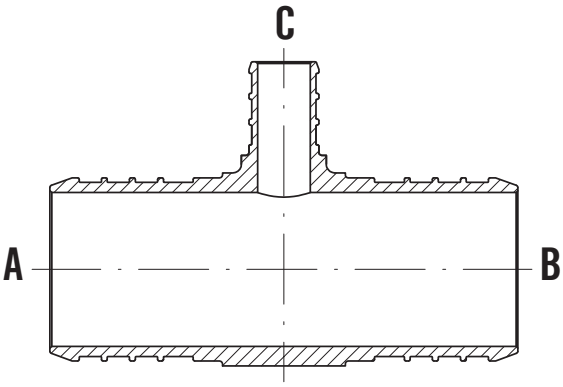

Reducing Pex Tee

Size	A	B	C
1/2” x 3/4”	1/2”	1/2”	3/4”
3/4” x 1/2” x 1/2”	3/4”	1/2”	1/2”
3/4” x 1/2” x 3/4”	3/4”	1/2”	3/4”
3/4” x 1/2”	3/4”	3/4”	1/2”
3/4” x 1”	3/4”	3/4”	1”
1” x 1/2”	1”	1”	1/2”
1” x 3/4” x 3/4”	1”	3/4”	3/4”
1” x 3/4” x 1”	1”	3/4”	1”
1” x 3/4”	1”	1”	3/4”
1 1/4” x 1/2”	1 1/4”	1 1/4”	1/2”
1 1/4” x 3/4”	1 1/4”	1 1/4”	3/4”
1 1/4” x 1”	1 1/4”	1 1/4”	1”
1 1/4” x 1” x 3/4”	1 1/4”	1”	3/4”
1 1/4” x 1” x 1”	1 1/4”	1”	1”
1 1/2” x 1/2”	1 1/2”	1 1/2”	1/2”
1 1/2” x 3/4”	1 1/2”	1 1/2”	3/4”

Size	A	B	C
1 1/2” x 1”	1 1/2”	1 1/2”	1”
1 1/2” x 1 1/4”	1 1/2”	1 1/2”	1 1/4”
1 1/2” x 1” x 1”	1 1/2”	1”	1”
1 1/2” x 1 1/4” x 3/4”	1 1/2”	1 1/4”	3/4”
1 1/2” x 1 1/4” x 1”	1 1/2”	1 1/4”	1”
1 1/2” x 1 1/4” x 1 1/4”	1 1/2”	1 1/4”	1 1/4”
2” x 1/2”	2”	2”	1/2”
2” x 3/4”	2”	2”	3/4”
2” x 1”	2”	2”	1”
2” x 1 1/4”	2”	2”	1 1/4”
2” x 1 1/2”	2”	2”	1 1/2”
2” x 1 1/4” x 1 1/4”	2”	1 1/4”	1/2”
2” x 1 1/2” x 3/4”	2”	1 1/2”	3/4”
2” x 1 1/2” x 1”	2”	1 1/2”	1”
2” x 1 1/2” x 1 1/4”	2”	1 1/2”	1 1/4”
2” x 1 1/2” x 1 1/2”	2”	1 1/2”	1 1/2”

SUBMITTAL INFORMATION

- **Pressure Rating:** 150 PSI
- **Material:** Forged No-Lead Brass (C69300)
- Pex ends conform to ASTM F1807
- **Use with:** Pex tubing in accordance with ASTM F876 & F877
- Complies with NSF/ANSI 61-2012
- **Typical Applications:** Potable code and hot domestic water, hydronic heating systems and radiant heating systems

NO-LEAD: The weighted average of the wetted surface of this no-lead product contacted by consumable water contains less than one quarter of one percent (0.25%) lead.

A.Y. McDonald Mfg. Co.
4800 Chavenelle Rd
Dubuque, IA 52002

Toll Free: 1-800-292-2737
sales@aymcdonald.com
aymcdonald.com

A.Y. McDonald considers the information on this assembly drawing correct when published. Item and option availability, including specifications, are subject to change without notice.

Submitted by: